Application Data

Speeds Inch

To determine optimum speed, start at the lower end of the speed range, and then increase speeds until performance is maximized. When a countersink is operated at excessive RPM (n), chatter may result, and cutting edges can overheat and become prematurely dull.

Feeds Inch

Series	Countersink Diameter					
	1/8"	3/16"	1/4" - 7/8"	1" - 1-1/2"	2"	2-1/2" - 3"
	f-IPR					
60 / 61	.001-.004	.003-.006	.004-.008	.005-.009	.007-.011	.007-.013
78 / 79	.001-.004	.003-.006	.004-.008	.005-.009	.007-.011	.007-.013
92	—	—	.008-.012	.010-.013	.014-.017	—

Always start the feed at the low end of the range, and then slowly increase until chatter is eliminated.
To prevent the cam relief from rubbing on the workpiece, do not exceed maximum feed when using the 60 / 61 Uniflute® Series Countersinks.

Speeds Inch

Material	vc - SFM			
	HSS	HSS TiN Coated	HSS ALtima® Blaze Coated	Carbide
Aluminum / Aluminum Alloys	150-250	190-315	240-400	300-500
Brass / Bronze (ordinary)	75-125	90-160	120-200	150-250
Iron - Cast (soft)	75-125	90-160	120-200	125-225
Iron - Cast (medium hard)	50-100	65-125	80-160	100-175
Iron - Hard Chilled	10-20	15-25	20-35	20-35
Iron - Malleable	80-90	100-115	130-145	90-150
Magnesium / Magnesium Alloys	125-250	160-310	200-400	250-400
Monel, High Nickel Steel	30-50	40-65	50-80	50-75
Plastics, Bakelite	100-250	125-315	160-400	250-400
Steel - Mild (.2 - .3 carbon)	80-100	100-125	130-160	120-170
Steel - Mild (.4 - .5 carbon)	70-80	85-100	115-130	80-150
Tool Steels (1.2 carbon)	50-60	65-75	80-100	60-100
Steel - Forgings	40-50	50-65	65-80	50-80
Steel - Alloys (300 - 400 Brinnell)	20-30	25-40	35-50	30-50
Steel - High Tensile (35 - 40 Rc)	30-40	40-50	50-65	40-60
Steel - High Tensile (40 - 45 Rc)	25-35	30-45	40-56	35-55
Steel - High Tensile (45 - 50 Rc)	15-25	20-30	25-40	25-40
Steel - High Tensile (50 - 55 Rc)	7-15	10-20	15-30	15-20
Stainless Steel - Free Machining	30-80	40-100	50-130	80-125
Stainless Steel - Work Hardening	15-50	20-65	30-80	50-75
Ti-75A (commercially pure Titanium)	50-60	65-75	80-100	60-90
Inconel Alloys	15-20	20-25	25-35	25-35

Minimum Body Diameter For 82° Flat Head Cap Screws

Screw Size (mm)	Series 67 Size	All other C'sink Size
#4	7/16	1/4
#5	9/16	5/16
#6	9/16	5/16
#8	9/16	3/8
#10	9/16	1/2
#12	13/16	1/2
1/4	13/16	5/8
5/16	1-1/8	3/4
3/8	1-1/8	7/8
7/16	1-1/8	7/8
1/2	1-1/2	1
5/8	1-1/2	1-1/4
3/4	1-1/2	1-1/2

Diameter Gain in Size For Each .001" of Axial Depth in Hole

SIG	Axial Depth ap (inch)	Dia. Gain
30°	.0010	.0005
45°	.0010	.0008
60°	.0010	.0010
82°	.0010	.0017
90°	.0010	.0020
100°	.0010	.0028
120°	.0010	.0034

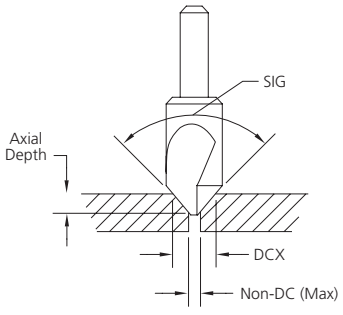

Diameter Gain = DCX - Non-DC (Max)

Technical data provided should be considered advisory only as variations may be necessary depending on the particular application.

Application Data *Continued*

Feeds Metric

Series	Countersink Diameter					
	1/8"	3/16"	1/4" - 7/8"	1" - 1-1/2"	2"	2-1/2" - 3"
	f-mm/Rev					
60 / 61	.025-.100	.076-.152	.100-.203	.127-.229	.178-.280	.178-.330
78 / 79	.025-.100	.076-.152	.100-.203	.127-.229	.178-.280	.178-.330
92	—	—	.203-.305	.254-.330	.356-.432	—

Always start the feed at the low end of the range, and then slowly increase until chatter is eliminated.
To prevent the cam relief from rubbing on the workpiece, do not exceed maximum feed when using the 60 / 61 Uniflute® Series Countersinks.

Minimum Body Diameter For 90° Flat Head Cap Screws (mm)

Screw Size	C'sink Diameter
3	7
4	10
5	12
6	14
8	19
10	23
12	31

Speeds Metric

Material	vc - m/min.			
	HSS	HSS TiN Coated	HSS ALtima® Blaze Coated	Carbide
Aluminum / Aluminum Alloys	45-75	60-100	75-120	90-155
Brass / Bronze (ordinary)	25-40	30-50	35-60	45-80
Iron - Cast (soft)	25-40	30-50	35-60	40-70
Iron - Cast (medium hard)	15-30	20-40	25-50	30-55
Iron - Hard Chilled	3-10	5-10	5-10	5-10
Iron - Malleable	25-30	30-35	40-45	30-45
Magnesium / Magnesium Alloys	40-75	50-95	60-120	75-125
Monel, High Nickel Steel	10-15	10-20	15-25	15-25
Plastics, Bakelite	30-75	40-100	50-120	80-120
Steel - Mild (.2 - .3 carbon)	25-30	30-40	40-50	40-50
Steel - Mild (.4 - .5 carbon)	20-25	25-30	35-40	25-45
Tool Steels (1.2 carbon)	15-20	20-25	25-30	20-30
Steel - Forgings	10-15	15-20	20-25	15-25
Steel - Alloys (300 - 400 Brinnell)	5-10	10-15	10-15	10-15
Steel - High Tensile (35 - 40 Rc)	10-15	10-15	15-20	15-20
Steel - High Tensile (40 - 45 Rc)	8-15	10-15	10-20	10-20
Steel - High Tensile (45 - 50 Rc)	5-10	5-10	8-10	8-15
Steel - High Tensile (50 - 55 Rc)	2-5	3-5	5-10	5-6
Stainless Steel - Free Machining	10-25	10-30	15-40	25-40
Stainless Steel - Work Hardening	5-10	5-20	10-25	15-25
Ti-75A (commercially pure Titanium)	15-20	20-25	25-30	20-30
Inconel Alloys	5-6	5-10	5-10	8-15

Diameter Gain in Size For Each .025mm of Axial Depth in Hole

SIG	Axial Depth ap (mm)	Dia. Gain (mm)
30°	.025	.0127
45°	.025	.0203
60°	.025	.0254
82°	.025	.0432
90°	.025	.0508
100°	.025	.0711
120°	.025	.0864

Conversion Formulas
(vc-m/min X 318.057) / Tool Diameter*=RPM (n)
(vc-SFM X 3.82) / Tool Diameter=RPM (n)

*Tool Diameter must be in mm.

Technical data provided should be considered advisory only as variations may be necessary depending on the particular application.